CNG PRESSURE REGULATOR

SAN 209 SERIES

ISO 15500-9 & CSA NGV 3.1-1995 COMPLIANCE TESTED

INSTALLATION GUIDE

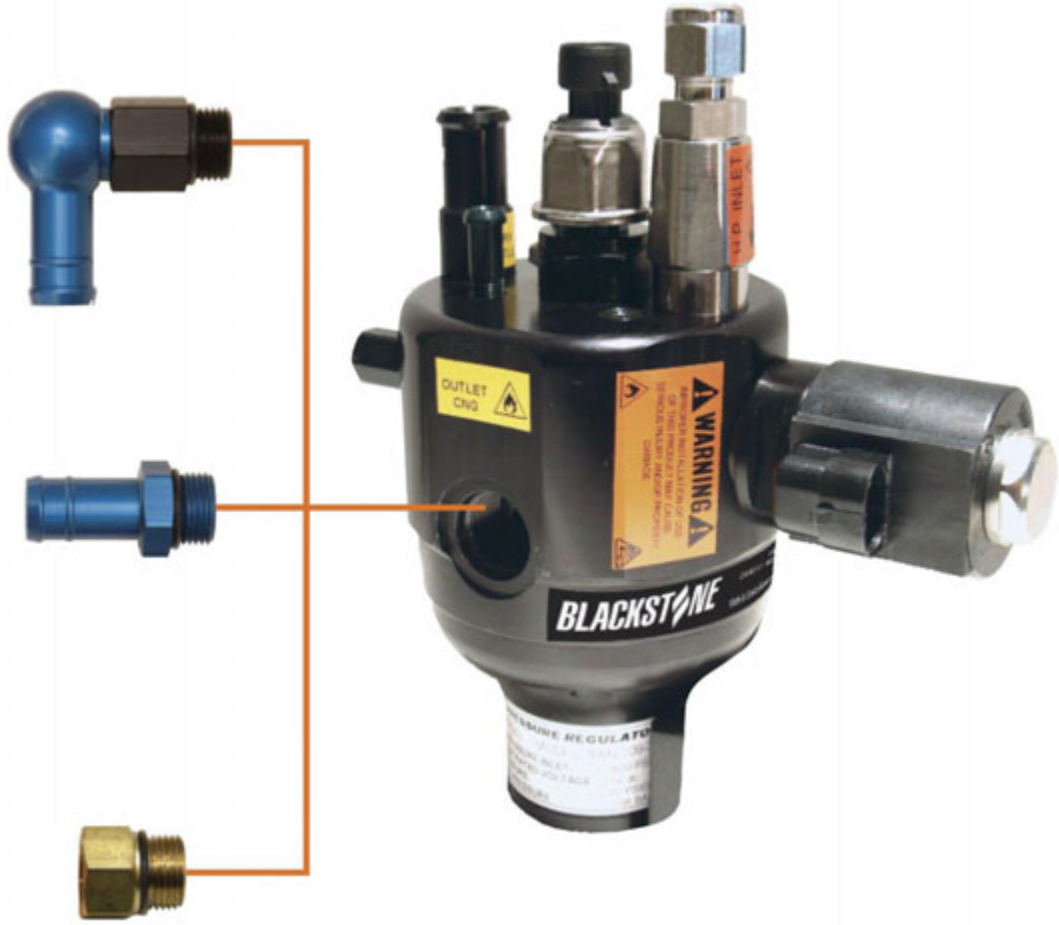

SINCE EACH INSTALLATION IS APPLICATION SPECIFIC. THE FOLLOWING IS A 'GUIDELINE'

INSTALLATION SHALL BE PERFORMED ONLY BY QUALIFIED/CERTIFIED PERSONNEL IN COMPLIANCE WITH ALL FEDERAL, STATE, PROVINCIAL, AND MUNICIPAL INCLUDING LOCAL REGULATORY CODE(S) AND STANDARDS AS STATED

130 Otonabee Drive
Kitchener, Ontario
Canada N2C 1L6

www.blackstonecng.com
info@blackstoneca.com

Tel: 519-896-4967
Fax: 519-896-6457

CNG PRESSURE REGULATOR

SAN 209 SERIES

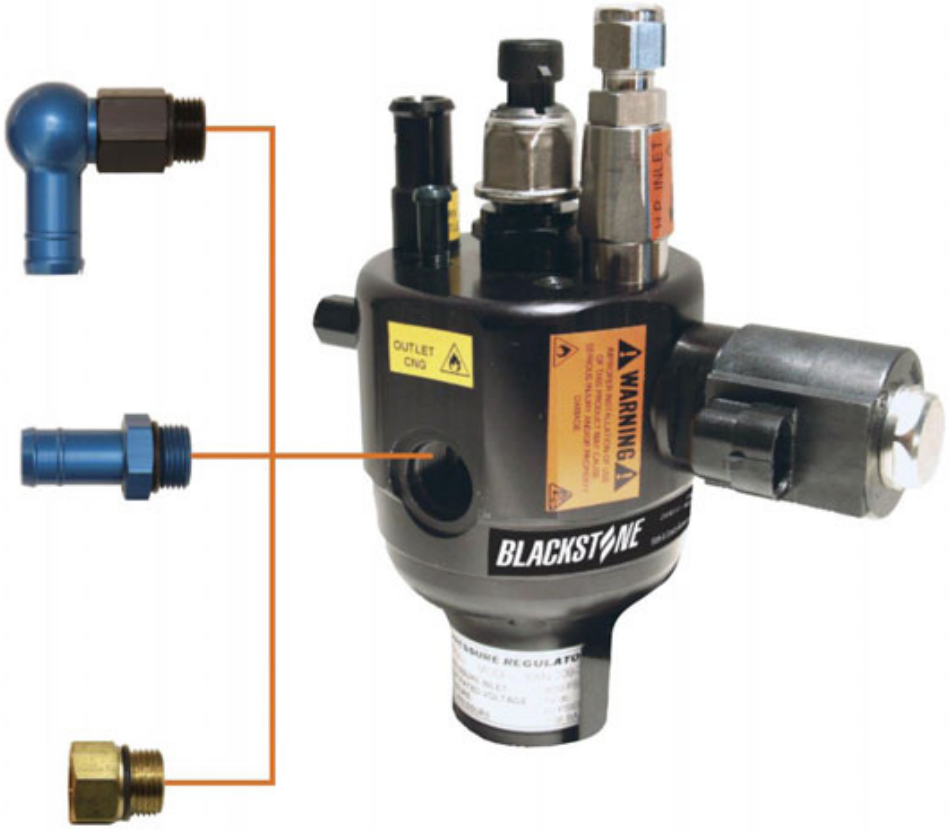

- ISO 15500-9 & CSA NGV 3.1-1995 COMPLIANCE TESTED
- ACCURATE AND RELIABLE
- HEAVY DUTY CONSTRUCTION
- INTEGRAL RELIEF VALVE
- HIGH FLOW RATE – UP TO 25 G/SEC
- WIDE RANGE OF OUTLET SET PRESSURES- 30PSI TO 150PSI
- MINIMAL DROOP
- REPLACEABLE INLET GAS FILTER CARTRIDGE

CNG SERIES: - SAN209 (Patent Pending)

SPECIFICATIONS:

Type of Gas:	*CNG (Compressed Natural Gas)*
Max. Inlet Pressure:	*4500 psig (310 bars)*
Outlet Pressure Range:	*30 to 150 psig (10 bars)*
Temperature Range:	*-40 to 125 Deg. Celsius*
Flow Rate:	*Up to 25 g/sec.*

OPTIONS:

- *INLET FITTINGS (VARIOUS)*
- *OUTLET FITTINGS (VARIOUS)*
- *HP PRESSURE SENSOR*
- *HP SOLENOID VALVE (12 OR 24 VDC)*
- *HP FILTER CARTRIGE (REPLACEABLE)*

***LIMITED 2 YEARS WARRANTY**

130 Otonabee Drive
Kitchener, Ontario
Canada N2C 1L6

www.blackstonecng.com
info@blackstoneca.com

Tel: 519-896-4967
Fax: 519-896-6457

PERMITTED RANGE OF HIGH PRESSURE REGULATOR (SOLENOID VALVE) ORIENTATION

[THE OPTIONAL SOLENOID ON/OFF VALVE SHOULD NEVER POINTING DOWN - (6 “0” CLOCK”) TOWARDS THE GROUND]

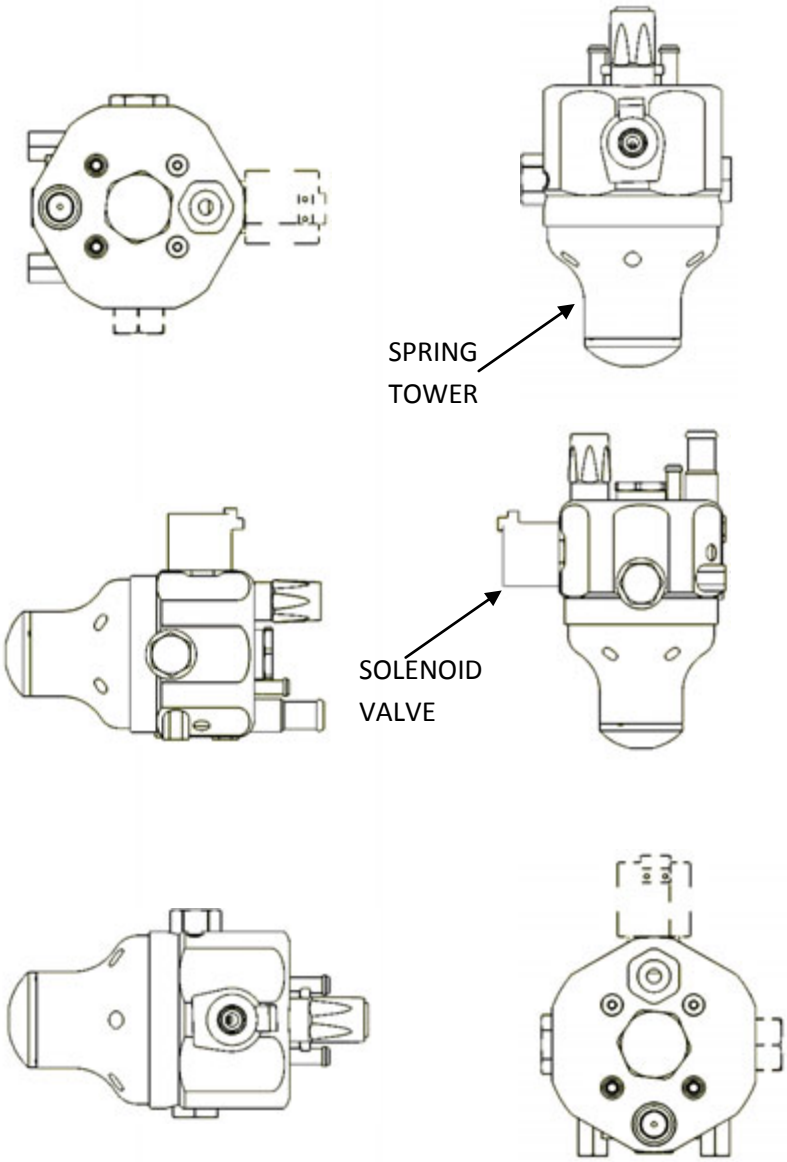

130 Otonabee Drive
Kitchener, Ontario
Canada N2C 1L6

www.blackstonecng.com
info@blackstoneca.com

Tel: 519-896-4967
Fax: 519-896-6457

PERIPHERAL DIMENSIONS

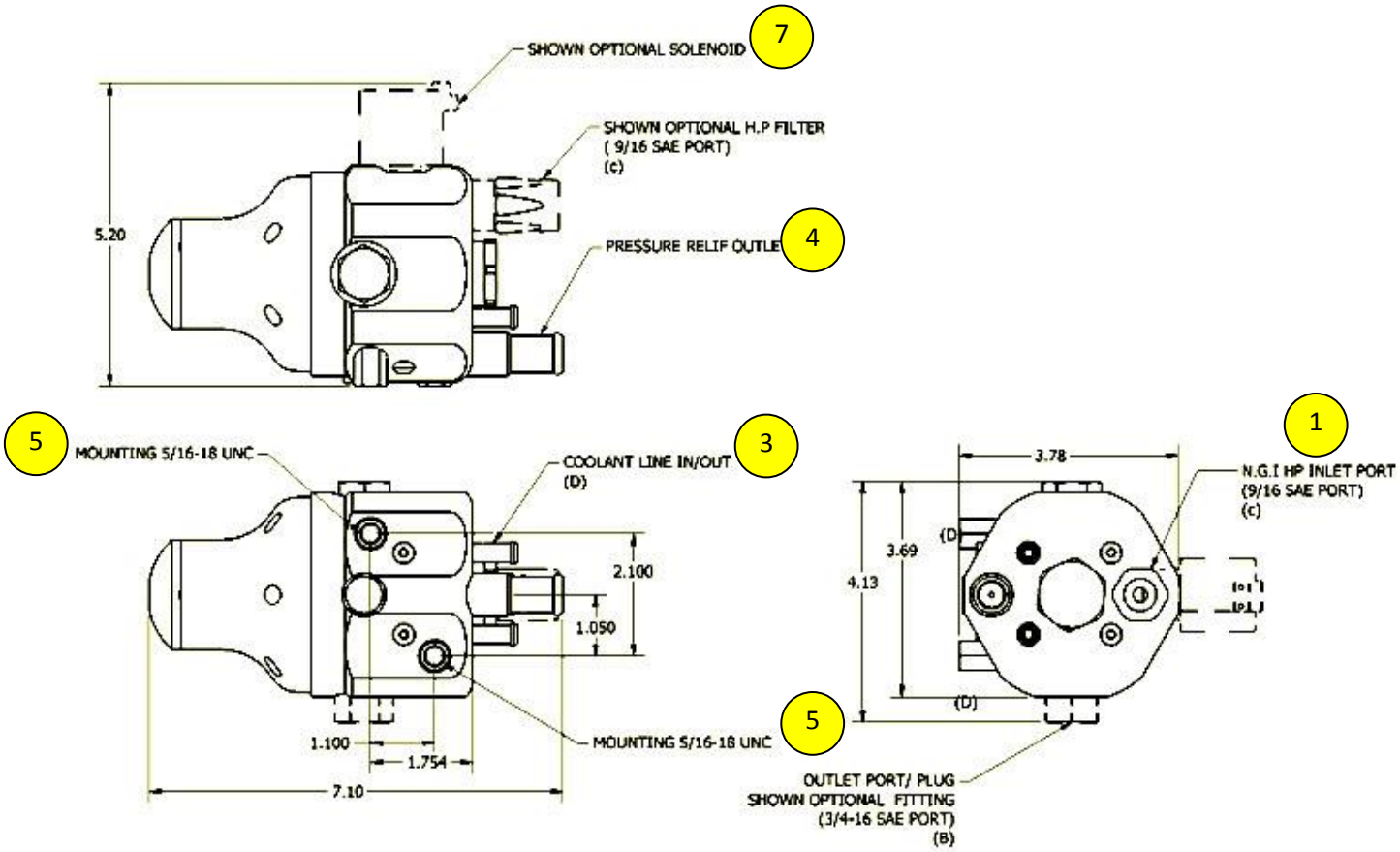

130 Otonabee Drive
Kitchener, Ontario
Canada N2C 1L6

www.blackstonecng.com
info@blackstoneca.com

Tel: 519-896-4967
Fax: 519-896-6457

HIGH PRESSURE REGULATOR

Ports identification

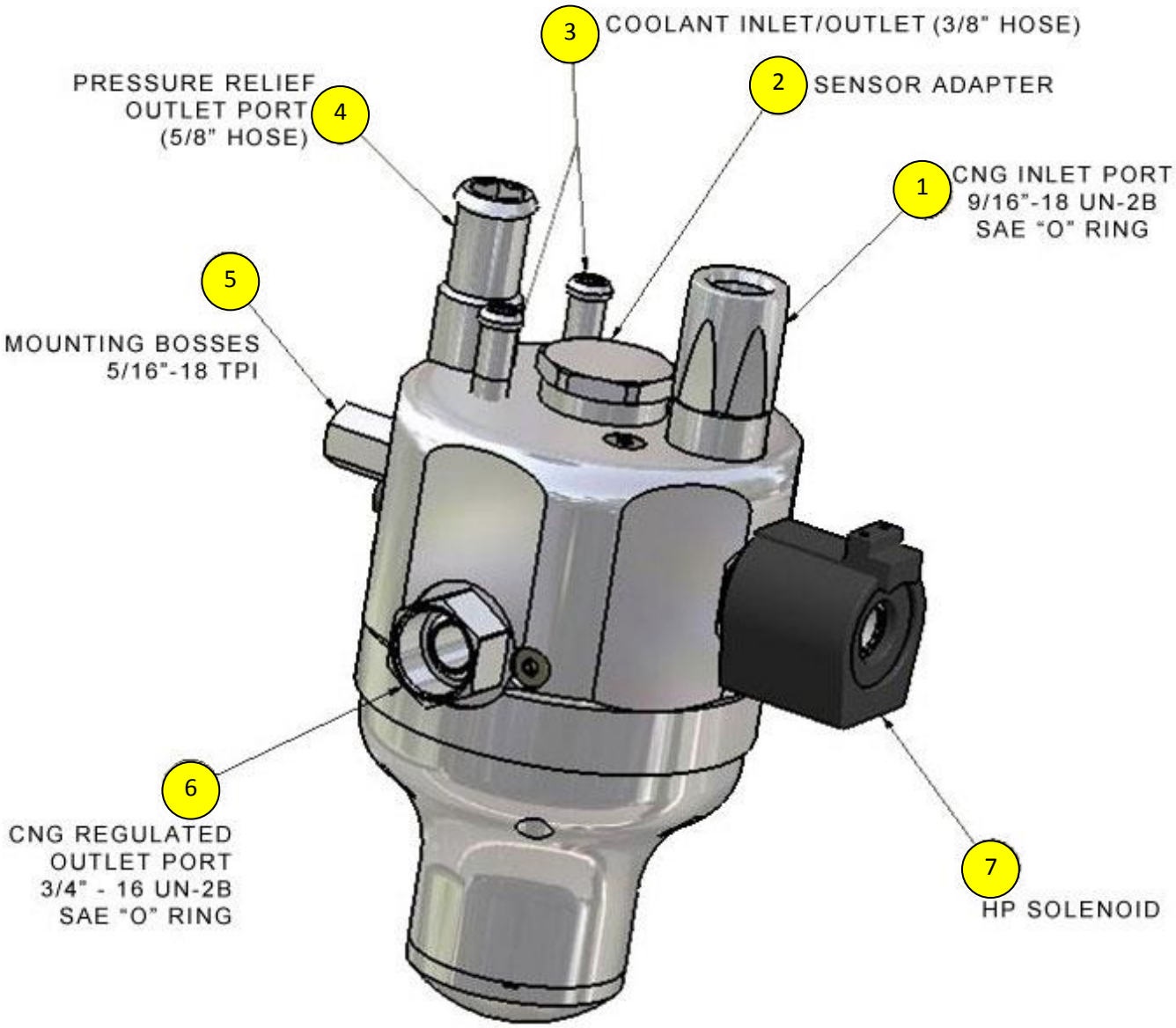

130 Otonabee Drive
Kitchener, Ontario
Canada N2C 1L6

www.blackstonecng.com
info@blackstoneca.com

Tel: 519-896-4967
Fax: 519-896-6457

GUIDE - REGULATOR INSTALLATION

SINCE EACH INSTALLATION IS APPLICATION SPECIFIC THE FOLLOWING IS A 'GUIDELINE'

INSTALLATION SHALL BE PERFORMED ONLY BY QUALIFIED/CERTIFIED PERSONNEL IN COMPLIANCE WITH ALL FEDERAL, STATE, PROVINCIAL, AND MUNICIPAL INCLUDING LOCAL REGULATORY CODE(S) AND STANDARDS AS STATED

Application

The intentional use for the pressure regulator is for vehicular/industrial applications that utilizes Compressed Natural Gas (CNG) as Fuel. Typically the CNG stored in cylinder(s) at various rated pressures (3600/5000 psig vehicular/stationary) at full capacity. The regulator is designed/employed to dispense and maintain the fuel (cng) at significantly reduced pressure (predetermined/application specific) ranges whilst simultaneously controlling that pressure regardless of volumetric demand (constantly changing flow rate) and supply input pressures (depleting storage).
Integral and independent from the gas passages is a circuit that facilitates warm engine coolant to be circulated through the regulator body counteracting the potential of freezing from within (Joule-Thompson effect) the gas passages of moisture and other fuel constituents preventing malfunctioning of the regulator.

Storage

The regulator must be stored in original packing until installation. Introduction of foreign substances in the regulator openings must be prevented. The unit can be stored in any temperature between –40 and +85 °C for long term.

Installation Instructions

Mounting 5 (SEE PAGES 2, 3 & 4)
The regulator is designed for chassis or vehicle body mounting. It should never be mounted directly to the engine.
The device should be mounted in a location that will never exceed 125 Celsius, hot soak inclusive. When mounted in close proximity to high radiant heat sources (exhaust components), heat shielding is required.

The regulator can be mounted in any orientation within 180 deg. Angle, from the horizontal (9 O'COLCK) through the vertical **(6 O' CLOCK)** to the horizontal (3 O'CLOCK) planes **positioning the spring tower of the regulator to bias downwards. (SEE PAGE 2 OF 8).**

Additional to the above, for regulators with the (optional) Pressure Solenoid Shut-off Valve. The Solenoid Valve (Coil) shall always be oriented **upwards** within 180 deg. angle from the horizontal (09:00 AM through the **vertical (12 O'clock**) to the horizontal (3:00 PM) planes. **Never downwards**.

130 Otonabee Drive
Kitchener, Ontario
Canada N2C 1L6

www.blackstonecng.com
info@blackstoneca.com

Tel: 519-896-4967
Fax: 519-896-6457

Both of these requirements are intended to prevent oil or water condensate from accumulating in the regulator's, shutoff valve or the spring tower that result in potentially catastrophic failure modes.

The regulator has mounting (holes) bosses are protruding from the plane opposite to the inlet port. These bosses (holes) are threaded 5/16" 18 UNF to an approx. depth of ½". Mount regulator using two 5/16" -18 bolts with flat washers and lock washers (or thread locking compound). Torque to 12 +/-1 ft-lb (16 +/- 1 N-m). Use backing washers if necessary to ensure load distribution.

Filtration 1

The filter provided with the regulator should always be REMAINED installed. This filter will either be pre-installed from the factory (if the regulator is ordered with the optional inlet filter cartridge). However an optional **in line High Pressure Filter** (cartridge) is also available.

Upstream Solenoid Valve 7

An electric Shut Off Device/Valve is typically required prior to the regulator in all applications. Even though the regulator by itself is a bubble tight lock off device, this requirement may be regulatory/mandatory or a necessity for certain failure modes. An optional independent **In Line High Pressure Solenoid Valve** is also available from BLACKSTONE.

Inlet/Outlet Plumbing 1 6

It is critically important for functionality and safety, that the inlet, outlet fittings and all other subsequent plumbing lines/interfaces are sized/specified and routed for the required operating pressures and flow, incompliance with all applicable regulatory standards and legal requirements.

It is the responsibility of the end user, and for ensuring the authorization of only suitably qualified/certified Applications Engineering and Installation Personnel/Technicians.

The regulator has integral SAE o-ring (boss) ports, which correspond to SAE-6 for the inlet and SAE-8 for the outlet.

INLET PORT (CNG) 1

The inlet fitting shall be rated for 5000 psig service pressure. Suggested torque is 20 – 25 ft-lb.
However the fitting manufacture's spec. takes precedent.

OUTLET PORTS (CNG) 6

There are two (2) outlet ports to facilitate ease of installation from left hand vs. right hand mount.

ONLY THE PORT PLUG SUPPLIED SHALL BE USED/EXCHANGED TO PLUG THE ALTERNATIVE OUTLET PORT NOT IN USE.

RECOMMENDED torque for the outlet (SAE-8) fitting is 22 to 27 ft-lb (30 to 37 N-m)

Inadequate torque will cause fitting to loosen in service and leak. EXCESSIVE WILL COMPROMISE THE INTEGRITY OF THE UNION.

A compatible lubricant should be applied to the o-ring of the fitting, prior to installation, to facilitate the o-ring seating and sealing properly**. Do not use silicon grease** as it may DAMAGE UEGO sensor. Thread sealant is not required, nor recommended.

130 Otonabee Drive
Kitchener, Ontario
Canada N2C 1L6

www.blackstonecng.com
info@blackstoneca.com

Tel: 519-896-4967
Fax: 519-896-6457

All tubing must be clean and free of burrs, which could contaminate the regulator or system. The outlet line should not be elevated above the regulator outlet port. The risk is oil and/or condensate will accumulate (flow back) in to the regulator. From an even lower plane is preferred.

Due to the potential of extremely low temperatures on the gas outlet, the outlet pipe between the regulator and the heat exchanger must be rated for –70 C or lower without damage. Rubber or lined hoses will not withstand these extreme low temperatures.

Engine Coolant 3

The expansion of high pressure gas to low pressure creates a very large temperature drop. To prevent moisture from freezing inside the regulator and creating a blockage, heated engine coolant must be circulated through the regulator. The flow direction through the regulator does not matter. Engine coolant must be maintained for at least -45 C antifreeze protection due to the extreme cold of the gas. If the coolant were to freeze in the regulator, the regulator maybe damaged. The coolant flow should first come to the regulator and then to the heat exchanger in application that use a coolant/gas heat exchanger.

PRD Connection

⚠ The low pressure fuel lines and aft components are protected from overpressure by an integral pressure relief valve (PRV) THAT IS FACTORY PRE-SET. NO ADJUSTMENT IS PERMITTED/AVAILABLE.
The device will actuate (OPEN/CLOSE) at the prescribed (APPLICATION SPECIFIC) factory set pressure point.
It is the end user responsibility for plumbing/connecting the PRV OUTLET in accordance TO ALL APPLICABLE FEDRAL & LOCAL REGULATORY CODES, STANDARDS AND REQUIREMENTS

MAP Bias Connection (OPTIONAL)

The line that connects the MAP bias to the regulator must be rated for the pressure, temperature and for a fuel/air mixture. In the case of engine backfire, a method for preventing a backfire from passing up the bias line to the regulator should be installed. This can be accomplished by using a metal line with a length to diameter of at least 30:1 or by using a metal sintered element installed somewhere before the bias fitting. The bias fitting should not be rotated or removed for any reason from the regulator. To do so may cause metal filing to enter the regulator and cause premature failure of the diaphragm.

The orientation of the MAP bias port is not precisely controlled relative to the mounting holes. Due to the uncertainty of the final rotation of the spring tower on the body of the regulator the exact location of the MAP bias can be +/- 120 degrees. Allowance in the MAP bias line should be made for this tolerance.

Submergence

Since the regulator bias port is referenced to manifold pressure, the regulator can be submerged without damage for short periods of time. Regular or normal submergence of the regulator should be avoided by selection of a good mounting location.

Outlet Pressure Setting

The outlet pressure is factory set by part number and should never be adjusted by the customer. There are no user adjustments available/permitted.

130 Otonabee Drive
Kitchener, Ontario
Canada N2C 1L6

www.blackstonecng.com
info@blackstoneca.com

Tel: 519-896-4967
Fax: 519-896-6457

Chapter 2.
Technical Data

Media Specification

COMPRESSED NAUTRAL GAS (CNG)

Engine Coolant – Nominal Composition:

Ethylene Glycol	50-60 wt%
Water	40-50 wt%

-49 deg. F (-45 deg. C) or lower freeze point (change of phase) required to prevent potential regulator damage).

Operating Temperatures

Ambient:	-40 to 125 deg. C
Inlet Gas:	-40 to 40 deg. C
Coolant:	-40 to 100 deg. C

PRD

Opening pressure:	220+/-20 psig
Closing pressure:	CONTINGENT

PRD with open connection will keep downstream pressure below CONTINGENT bar when regulator is failed wide open with 248 bar inlet pressure.

130 Otonabee Drive
Kitchener, Ontario
Canada N2C 1L6

www.blackstonecng.com
info@blackstoneca.com

Tel: 519-896-4967
Fax: 519-896-6457